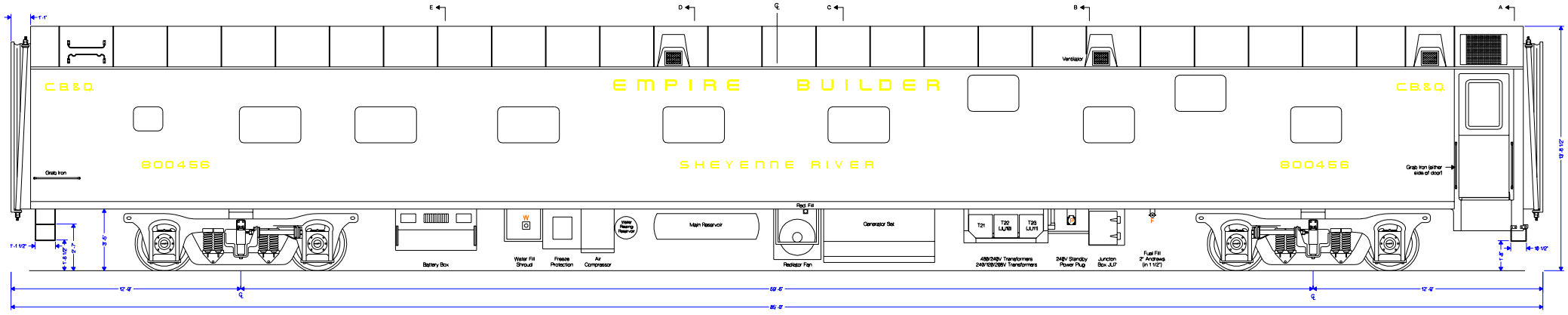

Section At A

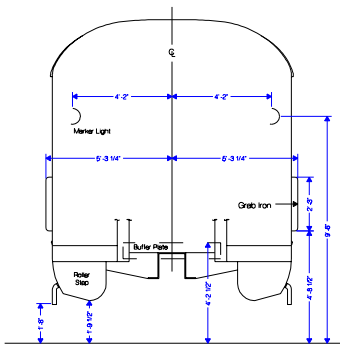

Section At B

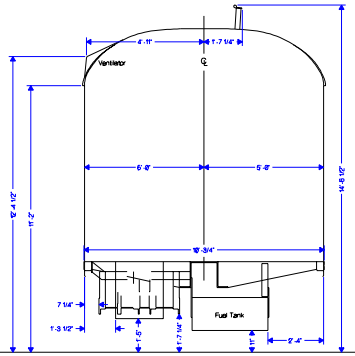

Section At C

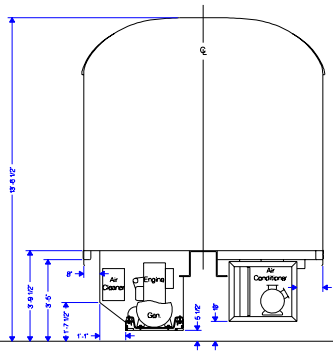

Section At D

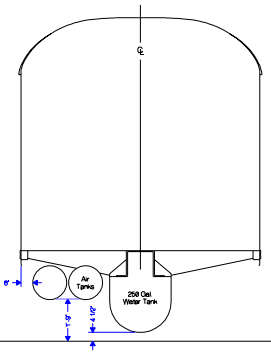

Section At E

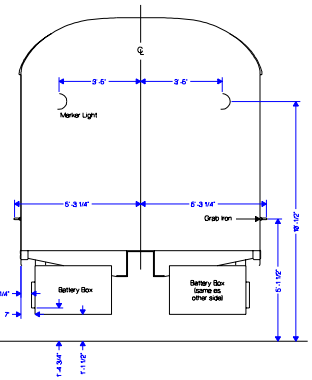

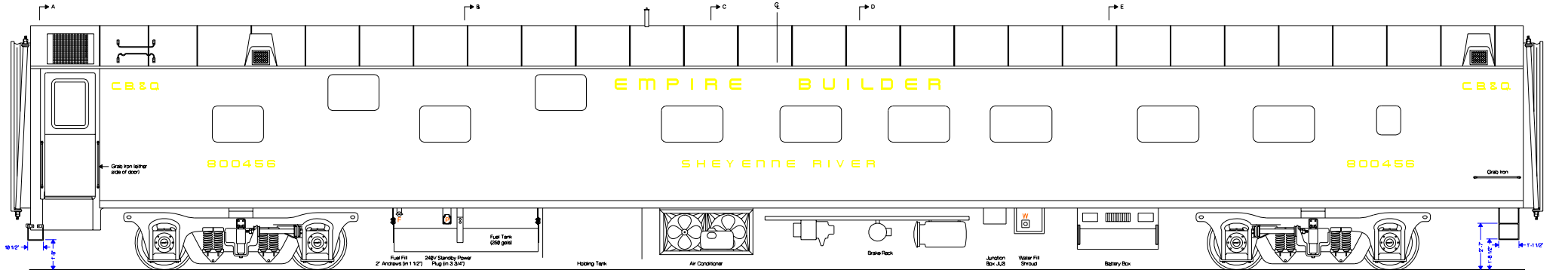

B-End Weight xx,xxx lbs. (tanks empty)

Add 2083+xxxx lbs. Water/Holding & 1725 lbs. Fuel

F - Diesel Fuel Fill
P - 240V Wayside Power
S - Waste Tank Pumpout
W - Fresh Water Fill

A-End Weight xx,xxx lbs. (tanks empty)

Sheyenne River Elevation	DRAWN: E.WILDE	DRAWN BY: E.WILDE	
	PROJ: 1	SPEC: 0001	SHEET: D
	FILE: ELEVAT	PROJ: STRUCT	
	DATE: 09 DEC 03	REV: 1.0	